EE 2083 - Power Systems II

Assignment 2: Fault Analysis

10 March 2017

Instructor: Dr. L. N. Widanagama Arachchige (lidula@elect.mrt.ac.lk)

Due: 31 March 2017 before 12 noon

Submission: to the EE office

Question 1

The following figure shows a single-line diagram of a simple power system.

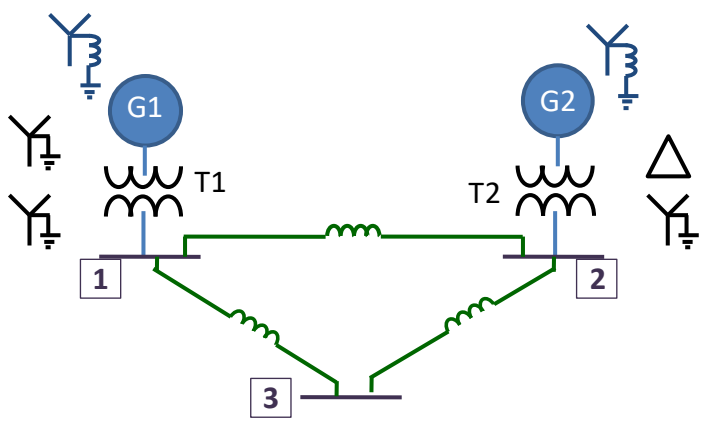

The neutral of each generator is grounded through a current limiting reactor of 0.2/3 per unit on a 100 MVA base. The system data is tabulated below. The generator and transformer data are expressed in per unit on their rating. Line parameters are given in per unit on a 100 MVA base. The generators are running on no-load at their rated voltage and rated frequency with their emfs in phase.

i. Convert the system parameters into a common 100 MVA base.
ii. Draw the sequence networks for the system
iii. Determine the,
    A. Thevenin's equivalent circuits for each sequence network and
    B. the fault currents

for the following disturbances:

a) A balanced three-phase fault at bus-3 through a fault impedance Z_f = j0.1 pu (on 100 MVA base)
b) A single line-to-ground fault at bus-3 through a fault impedance Z_f = j0.1 pu (on 100 MVA base)
c) A line-to-line fault at bus-3 through a fault impedance Z_f = j0.1 pu (on 100 MVA base)
d) A solid double line-to-ground fault at bus-3 pu (on 100 MVA base)

Item	Base MVA	Voltage Rating (kV)	X1	X2	X0
G1	90	20	0.135	0.135	0.045
G2	50	20	0.075	0.075	0.025
T1	50	20/220	0.05	0.05	0.05
T2	40	20/220	0.04	0.04	0.04
L12	100	220	0.125	0.125	0.3
L13	100	220	0.15	0.15	0.35
L23	100	220	0.25	0.25	0.7125